Submersible Electric Pumps for Solid-laden Wastewater

DOMO Series

LOWARA

The DOMO series electric pumps are available with twin-channel or vortex impeller (DOMO VX). Designed to handle suspended solids up to 50 mm in diameter (35 mm for DOMO 7 and DOMO 7VX). Four basic versions with 0.55 (0.75 HP) to 1.5 kW (2HP) rated power.
DRIVELUB SEAL SYSTEM.

- The single-phase versions feature:
  Pre-assembled float (version without float available on request).
  Integrated capacitor (except for DOMO 15 and DOMO 15 VX with control box on cable).
  Thermal overload protection.
- The DOMO 7 and DOMO 7VX versions feature:
  – Rp 1½" delivery port (female gas).
  – Handling of suspended solids up to 35 mm in diameter.
  – Fiberglass-reinforced nylon impeller (stainless steel impeller also available).
- The DOMO 10-15-20 and DOMO 10-15-20 VX versions feature:
  – 2" delivery port, female gas (can be turned into a flanged version if an optional accessory is installed).
  – Handling of suspended solids up to 50 mm in diameter.
  – Stainless steel twin-channel or vortex impeller.

APPLICATIONS

- Pumping of effluent (VX versions can also handle suspended solids).
- Emptying of septic tanks and residential sumps.
- Draining of flooded basements and garages.

SPECIFICATIONS

- Continuous duty with 35°C liquids and fully submerged pump.
- Dry motor (class F insulation).
- HO7RN-F type neoprene power cord.
- Maximum immersion depth: 5 m.
- Versions:
  Single-phase 220-240 V 50 Hz 2 poles.
  Three-phase 380-415 V 50 Hz 2 poles.
- Motor power
  0.55 to 1.1 kW for single-phase versions.
  0.55 to 1.5 kW for three-phase versions.

DRYVELUB SEAL SYSTEM

- Watertight electric motor protected by multiple seal system with oil chamber.
  A V-ring and silicon carbide mechanical seal (extremely resistant to wear and abrasion), as well as a lip seal which is continuously lubricated thanks to the DRIVELUB system, provide an extremely efficient barrier against infiltration.

TABLE OF MATERIALS

PART	MATERIAL
Pump body, Motor casing	STAINLESS STEEL (AISI 304 - DIN 1.4301)
DOMO 7 (VX) impeller	FIBERGLASS-REINFORCED NYLON
DOMO 10-15-20 (VX) impeller	STANINLESS STEEL (AISI 304 - DIN 1.4301)
Lower mechanical seal	SILICON CARBIDE/ SILICON CARBIDE
Upper lip seal	NITRILE RUBBER
Shaft extension	STAINLESS RUBBER (AISI 304 - DIN 1.4301)
Handle	NYLON

DOMO SERIES (TWIN-CHANNEL IMPELLER)
OPERATING CHARACTERISTICS AT 2850 min⁻¹ 50 Hz

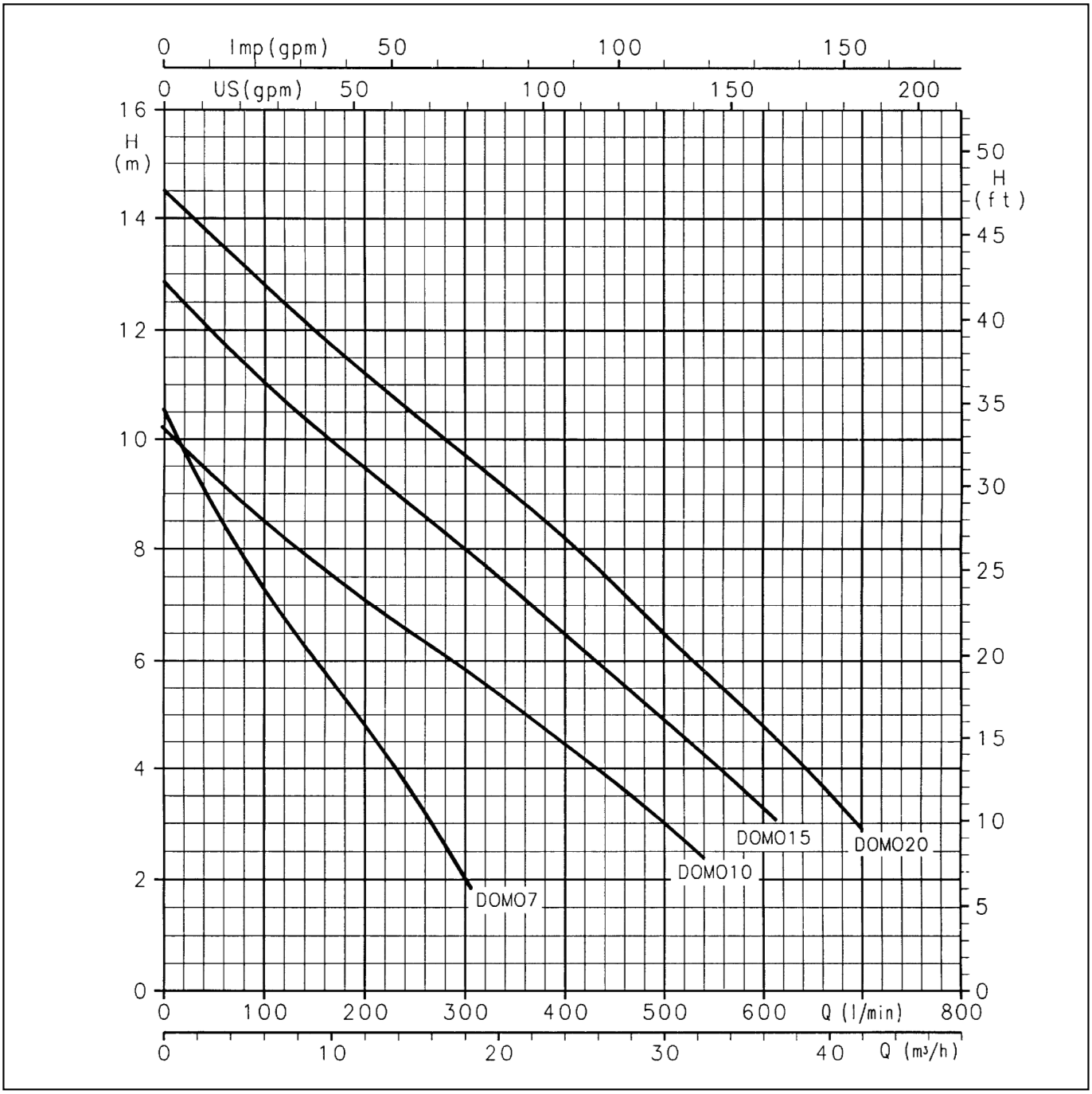

PUMP TYPE SINGLE-PHASE 220-240 V 50 Hz	PUMP TYPE THREE-PHASE 380-415 V 50 Hz	kW	HP	ABSORBED POWER SINGLE-PHASE 220-240 V	ABSORBED POWER THREE-PHASE 380-415 V	CAPACITOR µF	CAPACITOR V	ABSORBED POWER IN AMP. SINGLE-PHASE 220-240 V	ABSORBED POWER IN AMP. THREE-PHASE 380-415 V	Q = DELIVERY l/min	50	100	150	200	250	300	350	400	450	500	600	700
										m³/h	3	6	9	12	15	18	21	24	27	30	36	42
										H = TOTAL HEADMETRES COLUMN OF WATER												
DOMO 7	DOMO 7T	0,55	0,75	0,72	0,7	16	450	3,3	1,3		8,8	7,3	6,1	4,8	3,4	2	–	–	–	–	–	–
DOMO 10	DOMO 10T	0,75	1	1,15	1,15	22	450	5,1	2		9,3	8,5	7,8	7,1	6,5	5,8	5,2	4,5	3,7	3	–	–
DOMO 15	DOMO 15T	1,1	1,5	1,6	1,65	30	450	7,1	2,8		11,9	11	10,2	9,5	8,7	8	7,3	6,5	5,7	4,9	3,3	–
	DOMO 20T	1,5	2	–	2	–	–	–	3,6		13,7	12,8	12	11,2	10,4	9,7	9	8,2	7,3	6,5	4,8	2,9

These performances are valid for liquids with density p = 1.0 kg/dm³ and kinematic viscosity Y = 1 mm³/sec.

DOMO VX SERIES (VORTEX IMPELLER)
OPERATING CHARACTERISTICS AT 2850 rpm 50 Hz

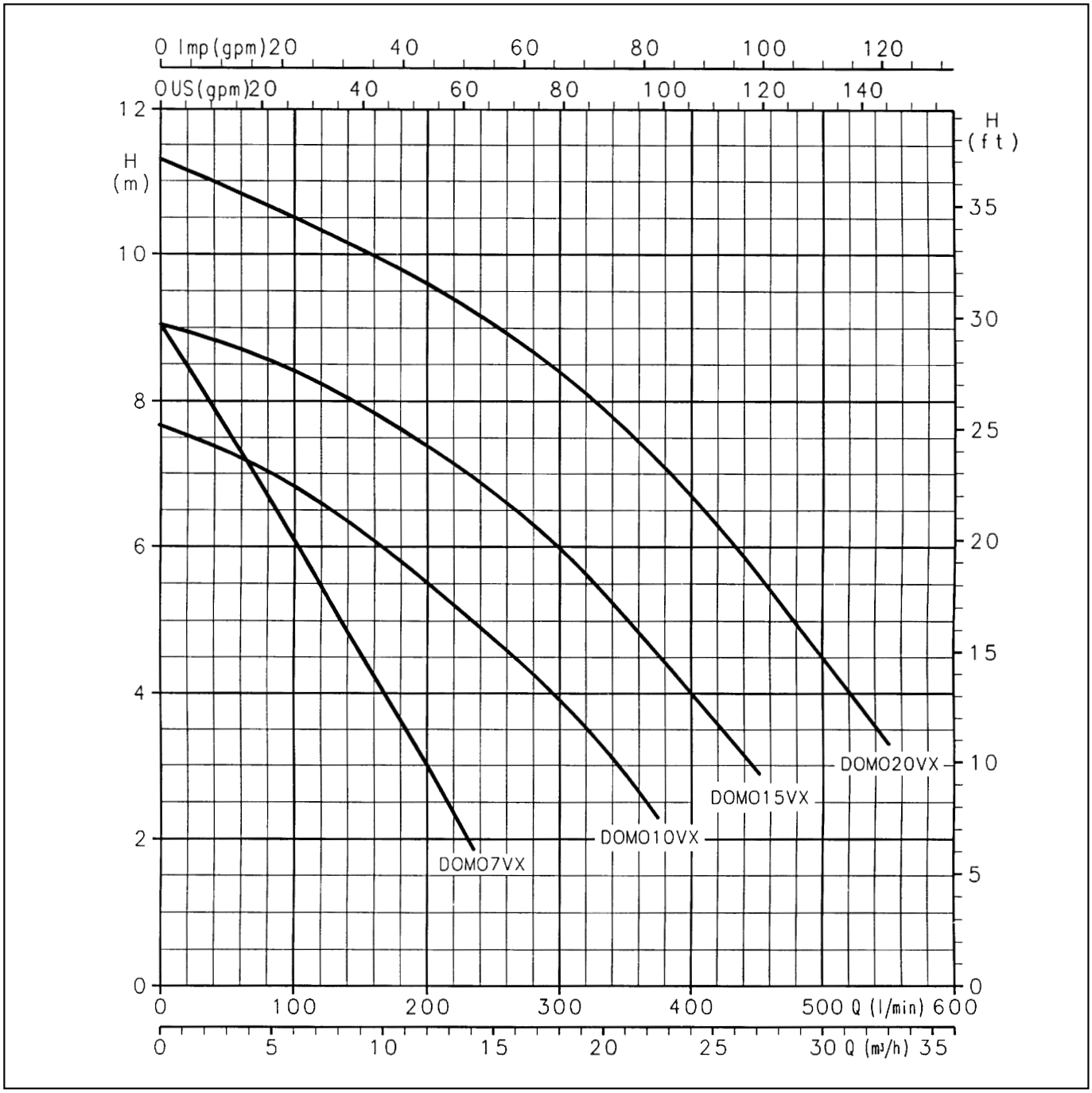

PUMP TYPE SINGLE-PHASE 220-240 V 50 Hz	PUMP TYPE TRIFASE 380-415 V 50 Hz	kW	HP	ABSORBED POWER SINGLE-PHASE 220-240 V	ABSORBED POWER THREE-PHASE 380-415 V	CAPACITOR µF	CAPACITOR V	ABSORBED CURRENT IN AMP. SINGLE-PHASE 220-240 V	ABSORBED CURRENT IN AMP. THREE-PHASE 380-415 V	Q = DELIVERY l/min	50	100	150	200	250	300	350	400	450	500	600	700
										m³/h	3	6	9	12	15	18	21	24	27	30	36	42
										H = TOTAL HEAD METRES COLUMN OF WATER												
DOMO 7VX	DOMO 7VXT	0,55	0,75	0,72	0,7	16	450	3,3	1,3		7,6	6,1	4,6	3	–	–	–	–	–	–	–	–
DOMO 10VX	DOMO 10VXT	0,75	1	1,18	1,2	22	450	5,2	2,1		7,3	6,8	6,2	5,5	4,8	3,9	2,9	–	–	–	–	–
DOMO 15VX	DOMO 15VXT	1,1	1,5	1,4	1,4	30	450	6,2	2,5		8,8	8,4	8	7,4	6,8	6	5	4	2,9	–	–	–
	DOMO 20VXT	1,5	2	–	1,85	–	–	–	3,4		10,9	10,5	10,1	9,6	9,1	8,4	7,6	6,7	5,7	4,5	–	–

These performances are valid for liquids with density p = 1.0 kg/dm³ and kinematic viscosity Y = 1 mm³/sec.

DOMO SERIES DIMENSIONS AND WEIGHTS

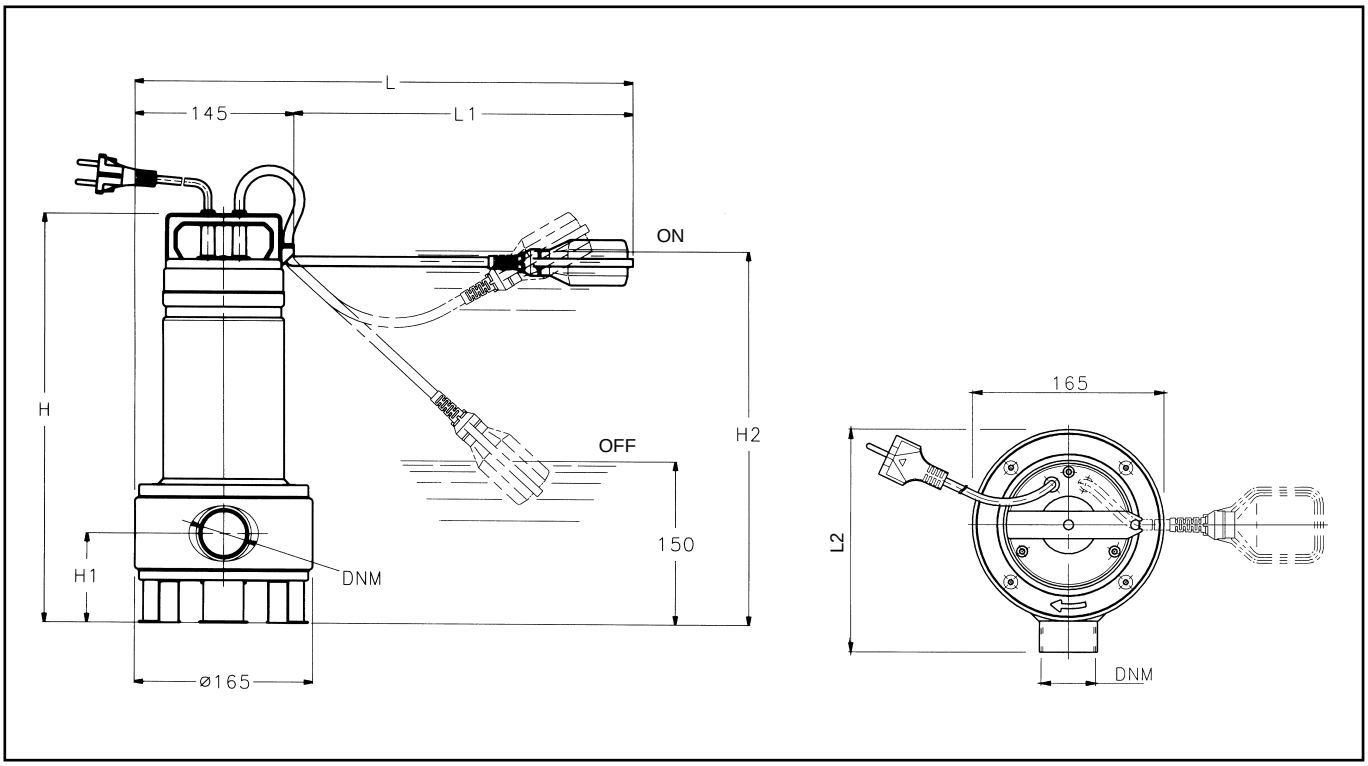

PUMP TYPE	DIMENSIONSI IN mm					H2	H	DNM	WEIGHT
	H	H1	L	L1	L2	START	STOP		kg
DOMO 7T - DOMO 7VXT	386	88	–	–	193	–	–	Rp 1"½	8,7
DOMO 7 - DOMO 7VX	386	88	420	275	193	370	150	Rp 1"½	10
DOMO 10T - DOMO 10VXT	433		–	–		–	–		11,4
DOMO 10 - DOMO 10VX	453		490	345		395	150		13,4
DOMO 15T - DOMO 15VXT	453	111	–	–	198	–	–	Rp 2"	13,4
DOMO 15 - DOMO 15VX	473		500	355		430	150		15,1
DOMO 20T - DOMO 20VXT	473		–	–		–	–		14,4

PUMP SECTION AND LIST OF MAIN COMPONENTS

1 Handle

Made of fiberglass-reinforced nylon.

2 Test hole

The tightness of the motor joints is tested by injecting compressed air.

3 Float

In compliance with European standards

4 Cable gland

The float cable can be secured at different lenghts to start the pump at the desired liquid level.

5 HO7RN-F type power supply cables.

6 Capacitor

7 Dry wound motor

Class F windings and built-in thermal protector (for single-phase versions).

8 Motor casing and pump body

AISI 304 stainless steel.

9 Seal system

10 Shaft

AISI 304 stainless steel.

11 Delivery port

2” (50 mm) diam. except for DOMO 7 (VX) that has 1¼” (35 mm) ports.

12 Impeller

Vortex or twin-channel type, made of AISI 304 stainless steel; DOMO 7 (VX) has a fibreglass-reinforced nylon impeller.

A) All elastomers are made of nitrile rubber (NBR).

B) All bolts and washers are made of AISI 304 stainless steel.

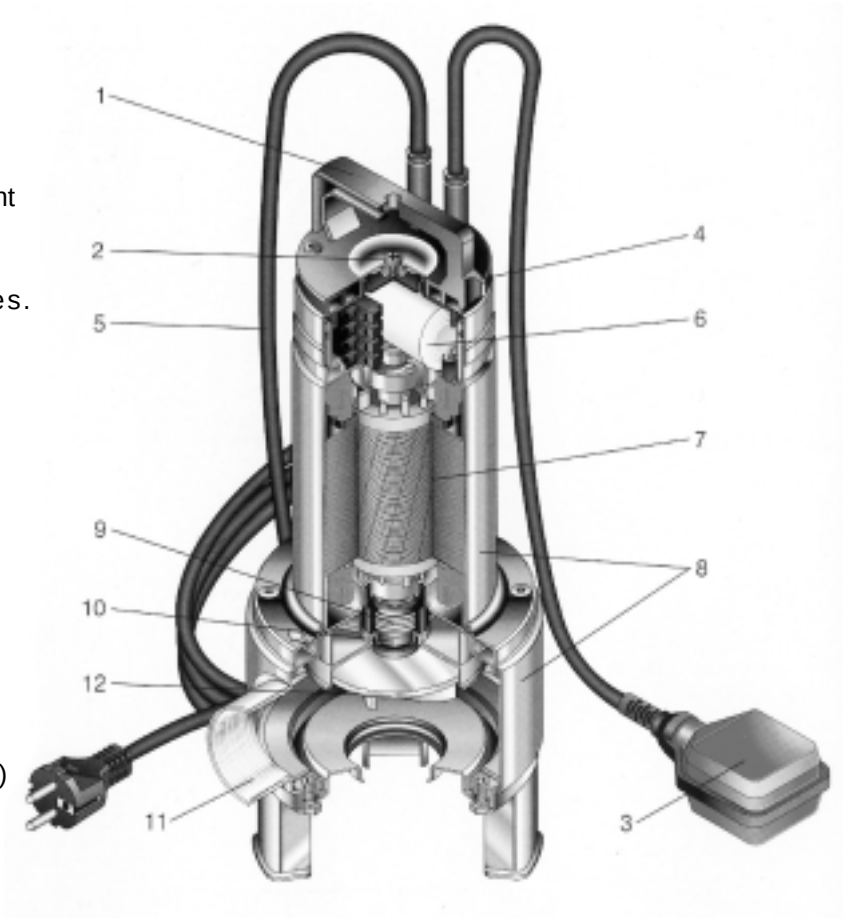

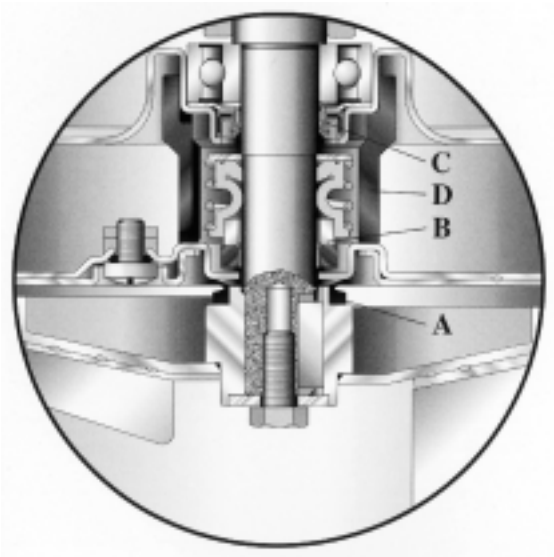

DRIVELUB SEAL SYSTEM

The electric motor is protected from ingress by a double seal system with oil chamber.

A V-ring (A) made of nitrile rubber adheres like a suction cup to the upper surface and constitutes a first efficient barrier that prevents solid particles from coming into contact with the mechanical seal.

The mechanical seal (B) made of silicon carbide (SIC SEAL) is extremely resistant to abrasion thanks to its exceptional hardness.

The second seal is a lip one (C). It is continuously lubricated thanks to the rotation of the mechanical seal spring which drives up the oil (ESSO MARCOL 82) conveyed by the pipe (D).